ECONOMIZER ASSEMBLY

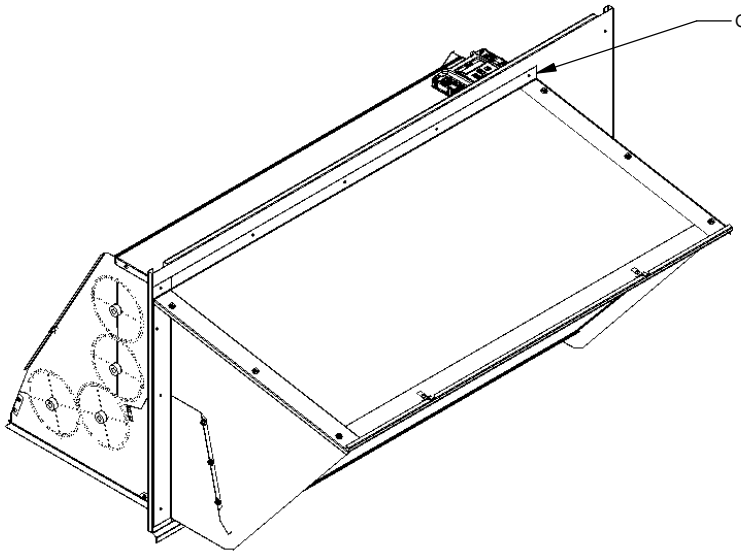

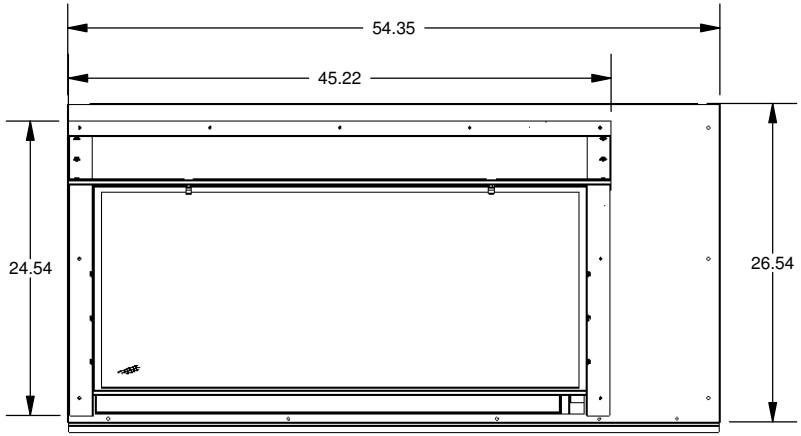

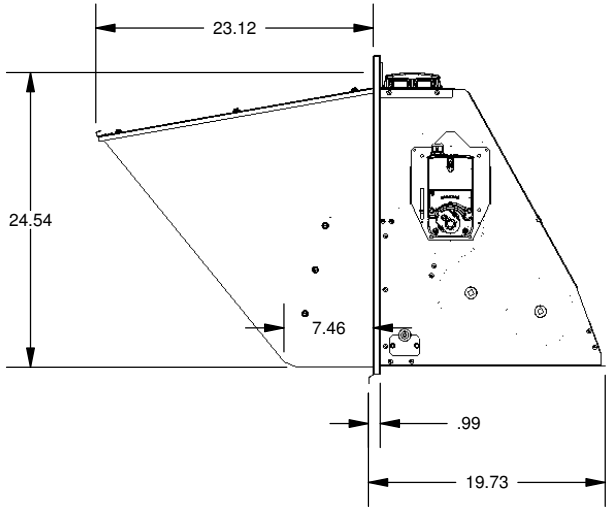

REV	ECO	DESCRIPTION	DATE	CHG	APPR

TOLERANCES ARE: ±1/32", ±0.031", ±2°

(DO NOT SCALE DRAWING) UNLESS OTHERWISE SPECIFIED DIMENSIONS ARE IN INCHES

THE INFORMATION CONTAINED IN THIS DRAWING IS THE SOLE PROPERTY OF MICROMETL CORPORATION. ANY REPRODUCTION IN PART OR WHOLE WITHOUT THE WRITTEN PERMISSION OF MICROMETL CORPORATION, IS PROHIBITED.

REV A-1

DRAWN BY JC	DESIGNED BY JC	CHECKED BY	
MATERIAL REF-BOM	WEIGHT (lb) 94	SHEET 3 OF 4	

MicroMetl Corporation
Indianapolis, IN. | (800) 862-4822 - Sparks, NV. (800) 884-4662
Lexington, TN. (888) 448-4669

SIZE A

PART NUMBER 0270L01114,1750,1754,1123 VISUAL

PART DESCRIPTION DAIKIN MEDIUM UNIT VERT ECONO

C:\micrometl_design_vault\projects\daikin\economizers\medium chasis\vertical econo\med vert std leak econ\0270l01114\0270L01114 VISUAL