Accessory Parts

CONVOUTP1502
CONVOUTP1507
DSC060C50ND02FI
DSC060C50YD02FI
DSC100C50ND02FI
DSC100C50YD02FI
DSC200C50ND02FI
DSC200C50YD02FI
DSC250C50ND02FI
DSC250C50YD02FI
SDRK01FI15T20D
SDRK01FI25D
SDRKT01FI15T20
SDRKT01FI25
SDSK01FI15T20D
SDSK01FI25D
SDSK02FI15T20D
SDSK02FI25D
SDSKT01FI15T20
SDSKT01FI25
SDSKT02FI15T20
SDSKT02FI25
SDSRK01FI15T20D
SDSRK01FI25D
SDSRK02FI15T20D
SDSRK02FI25D
SDSRKT01FI15T20
SDSRKT01FI25
SDSRKT02FI15T20
SDSRKT02FI25

ACCESSORY PARTS LIST

RP-FIOPLC

COMMERCIAL GRADE

This manual is to be used by qualified technicians only.

This manual replaces RP-FIOPLC released in October 2021.

© 2021 - 2022 DAIKIN COMPANY, L.P. ◊ 19001 Kermier Rd. ◊ Waller, TX 77484

Index

Functional Parts List 3

Illustration and Parts ..... 4 - 9

Views shown are for parts illustrations only, not servicing procedures.

4-5-22: REMOVED NOMENCLATURE PAGE PER REQUEST FROM DAIKIN MARKETING GROUP

Text Codes:

AR - As Required
NA - Not Available
NS - Not Shown
00000000 - See Note
QTY - Quantity Example (QTY 3) (If Quantity not shown, Quantity = 1)
M - Model Example (M1) (If M Code not shown, then part is used on all Models)

Expanded Model Nomenclature:

Example
M1 - Model#1
M2 - Model#2
M3 - Model#3

Daikin Company, L.P. is not responsible for personal injury or property damage resulting from improper service. Review all service information before beginning repairs.

Warranty service must be performed by an authorized technician, using authorized factory parts. If service is required after the warranty expires, Daikin Company, L.P. also recommends contacting an authorized technician and using authorized factory parts.

Daikin Company, L.P. reserves the right to discontinue, or change at any time, specifications or designs without notice or without incurring obligations.

For assistance within the U.S.A. contact:
Equipment Support
Daikin North America, LLC
19001 Kermier Road
Waller, Texas 77484
855-770-5678-Telephone
713-863-2382-Facsimile

For assistance outside the U.S.A. contact:
International Division
Daikin North America, LLC
19001 Kermier Road
Waller, Texas 77484
713-861-2500-Telephone
713-863-2382-Facsimile

Functional Parts

Part No:	Description:
0130L00249	BREAKER OPERATOR 250A (M9, M10)
0130L00027	SWITCH-DISCONNECT 100A (M5, M6)
0130L00033	SWITCH-DISCONNECT 200A (M7, M8)
0130L00245	SWITCH-DISCONNECT 250A (M9, M10)
0130L00046	SWITCH-DISCONNECT 60A (M3, M4)
0130M00061	TRANSFORMER (M1)
0130M00034	TRANSFORMER (M2)

SPECIAL PARTS

IOD-7004B	INSTALLATION INSTRUCTIONS (M11, M12, M13, M14, M15, M16, M17, M18, M19, M20, M21, M22, M23, M24, M25, M26, M27, M28, M29, M30)
IOD-7002B	INSTALLATION INSTRUCTIONS (M3, M4, M5, M6, M7, M8, M9, M10)
IOD-7001B	INSTALLATION INSTRUCTIONS (M1, M2)

Expanded Model Nomenclature

M1 - CONVOUTP1502
M2 - CONVOUTP1507
M3 - DSC060C50ND02FI
M4 - DSC060C50YD02FI
M5 - DSC100C50ND02FI
M6 - DSC100C50YD02FI
M7 - DSC200C50ND02FI
M8 - DSC200C50YD02FI
M9 - DSC250C50ND02FI
M10 - DSC250C50YD02FI
M11 - SDRKT01FI15T20
M12 - SDRKT01FI25
M13 - SDRK01FI15T20D
M14 - SDRK01FI25D
M15 - SDSKT01FI15T20
M16 - SDSKT01FI25
M17 - SDSKT02FI15T20
M18 - SDSKT02FI25
M19 - SDSK01FI15T20D
M20 - SDSK01FI25D
M21 - SDSK02FI15T20D
M22 - SDSK02FI25D
M23 - SDSRKT01FI15T20
M24 - SDSRKT01FI25
M25 - SDSRKT02FI15T20
M26 - SDSRKT02FI25
M27 - SDSRK01FI15T20D
M28 - SDSRK01FI25D
M29 - SDSRK02FI15T20D
M30 - SDSRK02FI25D

GFCI CONVENIENCE OUTLET

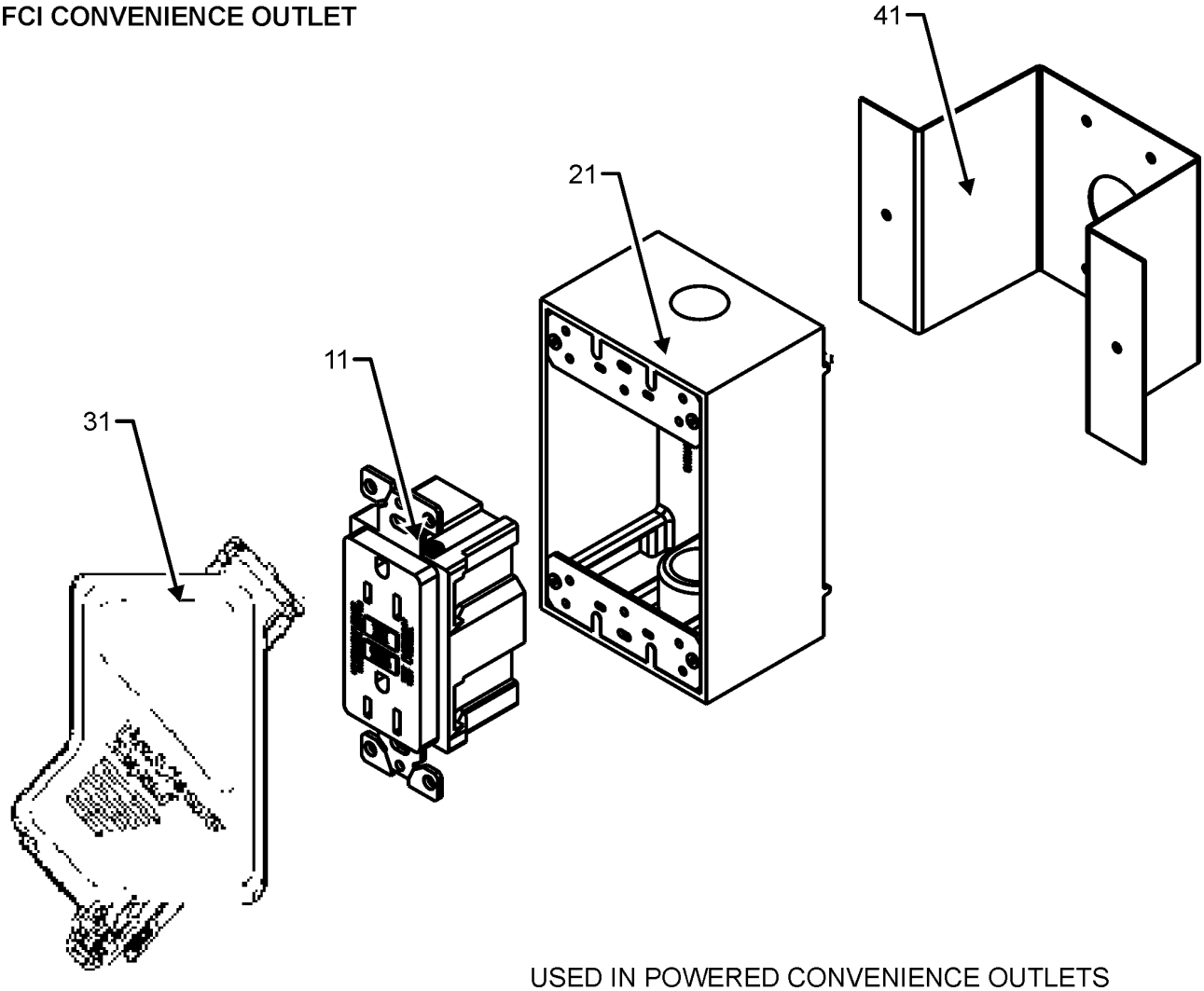

USED IN POWERED CONVENIENCE OUTLETS

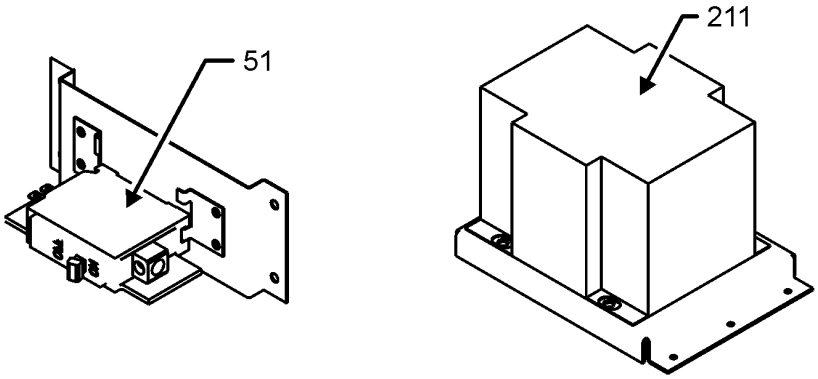

GFCI ASSEMBLY MAY DIFFER FROM WHAT IS SHOWN

Ref. No:	Part No:	Description:	Ref. No:	Part No:	Description:

Image 1:

11	0130L00103	RECEPTACLE-GFCI OUTLET (M1, M2)
21	0130L00012	GANG BOX-GFCI OUTLET (M1, M2)
31	0161G00012	POWER OUTLET BOX (M1, M2)
41	0121L00316	BRACKET-CONV OUTLET MOUNT (M1, M2)
51	0130M00065	BREAKER CIRCUIT (M1, M2)
211	0130M00034	TRANSFORMER (M2)
211	0130M00061	TRANSFORMER (M1)
NS	IOD-7001B	INSTALLATION INSTRUCTIONS (M1, M2)

Expanded Model Nomenclature

M1 - CONVOUTP1502
M2 - CONVOUTP1507
M3 - DSC060C50ND02FI
M4 - DSC060C50YD02FI
M5 - DSC100C50ND02FI
M6 - DSC100C50YD02FI
M7 - DSC200C50ND02FI
M8 - DSC200C50YD02FI
M9 - DSC250C50ND02FI
M10 - DSC250C50YD02FI
M11 - SDRKT01FI15T20
M12 - SDRKT01FI25
M13 - SDRK01FI15T20D
M14 - SDRK01FI25D
M15 - SDSKT01FI15T20
M16 - SDSKT01FI25
M17 - SDSKT02FI15T20
M18 - SDSKT02FI25
M19 - SDSK01FI15T20D
M20 - SDSK01FI25D
M21 - SDSK02FI15T20D
M22 - SDSK02FI25D
M23 - SDSRKT01FI15T20
M24 - SDSRKT01FI25
M25 - SDSRKT02FI15T20
M26 - SDSRKT02FI25
M27 - SDSRK01FI15T20D
M28 - SDSRK01FI25D
M29 - SDSRK02FI15T20D
M30 - SDSRK02FI25D

DISCONNECT MODULE

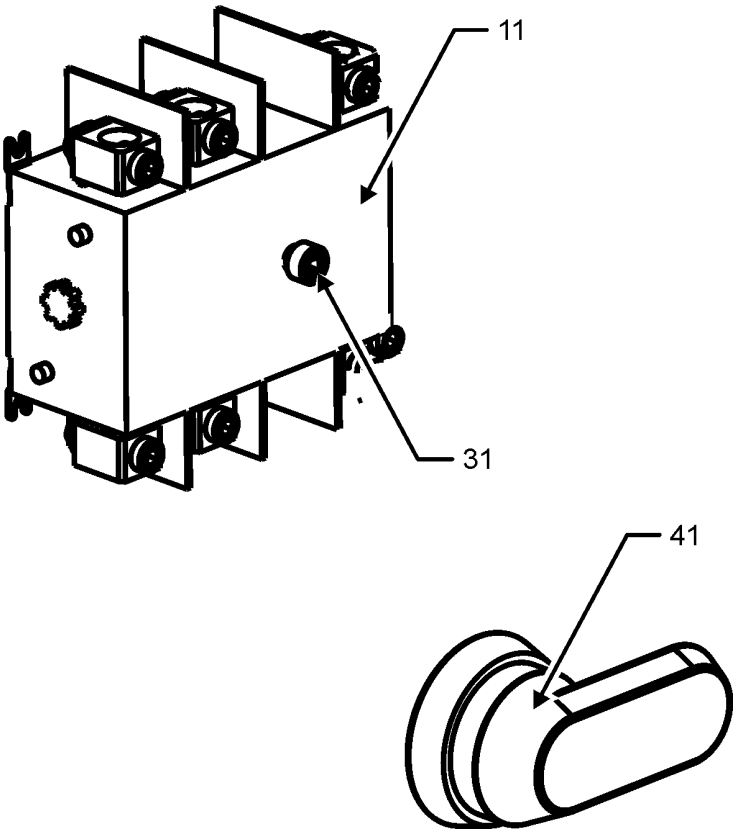

DISCONNECT ASSEMBLY MAY DIFFER FROM WHAT IS SHOWN

Ref. No:	Part No:	Description:	Ref. No:	Part No:	Description:

Image 1:

11	0130L00027	SWITCH-DISCONNECT 100A (M5, M6)
11	0130L00033	SWITCH-DISCONNECT 200A (M7, M8)
11	0130L00245	SWITCH-DISCONNECT 250A (M9, M10)
11	0130L00046	SWITCH-DISCONNECT 60A (M3, M4)
31	0130L00043	SHAFT, CUT (M7, M8)
31	0130L00058	SHAFT, CUT (M5, M6)
31	0130L00059	SHAFT, CUT (M3, M4)
31	0130L00256	SHAFT, CUT (M9, M10)
41	0130L00039	HANDLE, ROTARY (M3, M4, M5, M6, M7, M8)
41	0130L00247	HANDLE, ROTARY 250A (M9, M10)
NS	0121L04185	BRACKET-DISCONNECT SW (M9, M10)
NS	0121L04231	BRACKET-DISCONNECT SWITCH (M3, M4, M5, M6, M7, M8)
NS	0130L00249	BREAKER OPERATOR 250A (M9, M10)
NS	IOD-7002B	INSTALLATION INSTRUCTIONS (M3, M4, M5, M6, M7, M8, M9, M10)
NS	0121L00839SB	PNT, DISCONNECT COVER (M3, M4, M5, M6, M7, M8, M9, M10)

Expanded Model Nomenclature

M1 - CONVOUTP1502
M2 - CONVOUTP1507
M3 - DSC060C50ND02FI
M4 - DSC060C50YD02FI
M5 - DSC100C50ND02FI
M6 - DSC100C50YD02FI
M7 - DSC200C50ND02FI
M8 - DSC200C50YD02FI
M9 - DSC250C50ND02FI
M10 - DSC250C50YD02FI
M11 - SDRKT01FI15T20
M12 - SDRKT01FI25
M13 - SDRK01FI15T20D
M14 - SDRK01FI25D
M15 - SDSKT01FI15T20
M16 - SDSKT01FI25
M17 - SDSKT02FI15T20
M18 - SDSKT02FI25
M19 - SDSK01FI15T20D
M20 - SDSK01FI25D
M21 - SDSK02FI15T20D
M22 - SDSK02FI25D
M23 - SDSRKT01FI15T20
M24 - SDSRKT01FI25
M25 - SDSRKT02FI15T20
M26 - SDSRKT02FI25
M27 - SDSRK01FI15T20D
M28 - SDSRK01FI25D
M29 - SDSRK02FI15T20D
M30 - SDSRK02FI25D

SMOKE DETECTOR MODULE

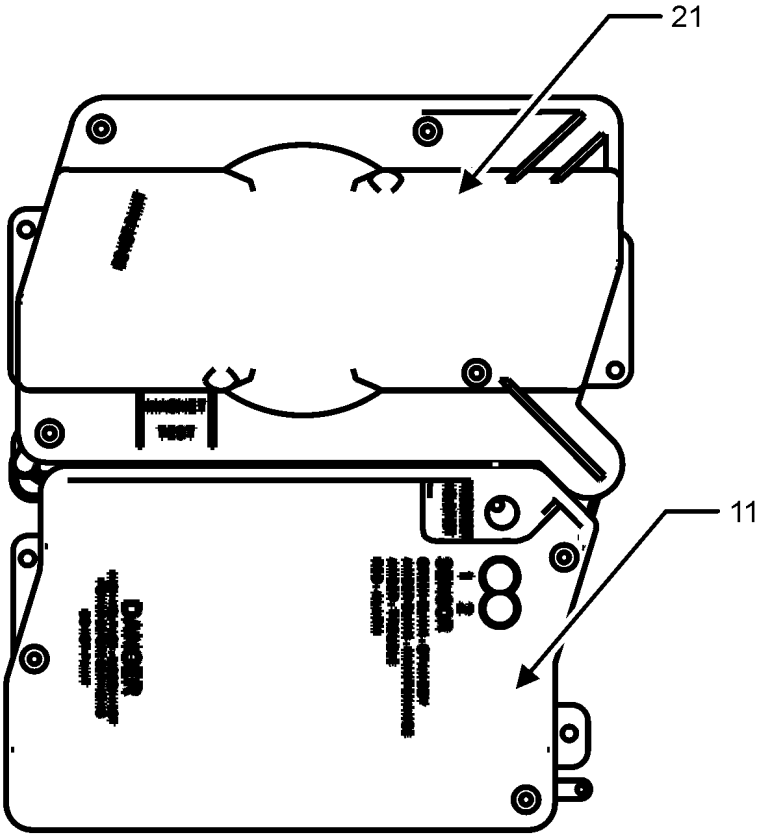

SMOKE DETECTOR ASSEMBLY MAY DIFFER FROM WHAT IS SHOWN

Ref. No:	Part No:	Description:	Ref. No:	Part No:	Description:
Image 1:					
11	D4120	SMOKE DETECTOR, PHOTO 4WIRE (M11, M12, M13, M14, M15, M16, M17, M18, M19, M20, M21, M22, M23, M24, M25, M26, M27, M28, M29, M30)			
21	D4S	SMOKE DETECTOR, SENSOR ONLY (M23, M24, M25, M26, M27, M28, M29, M30)			
NS	0121L01053	BRKT, SMOKE DETECTOR (M11, M12, M13, M14, M15, M16, M17, M18, M19, M20, M21, M22, M23, M24, M25, M26, M27, M28, M29, M30)			
NS	0121L00321	COVER-SMOKE DETECTOR (M15, M16, M17, M18, M19, M20, M21, M22, M23, M24, M25, M26, M27, M28, M29, M30)			
NS	IOD-7004B	INSTALLATION INSTRUCTIONS (M11, M12, M13, M14, M15, M16, M17, M18, M19, M20, M21, M22, M23, M24, M25, M26, M27, M28, M29, M30)			
NS	0259L00090	WIRE HARNESS-SMOKE DETECTOR (M11, M12, M15, M16, M17, M18, M23, M24, M25, M26)			
NS	0259L01660	WIRE HARNESS-SMOKE DETECTOR (M13, M14, M19, M20, M21, M22, M27, M28, M29, M30)			

Expanded Model Nomenclature

M1 - CONVOUTP1502
M2 - CONVOUTP1507
M3 - DSC060C50ND02FI
M4 - DSC060C50YD02FI
M5 - DSC100C50ND02FI
M6 - DSC100C50YD02FI
M7 - DSC200C50ND02FI
M8 - DSC200C50YD02FI
M9 - DSC250C50ND02FI
M10 - DSC250C50YD02FI
M11 - SDRKT01FI15T20
M12 - SDRKT01FI25
M13 - SDRK01FI15T20D
M14 - SDRK01FI25D
M15 - SDSKT01FI15T20
M16 - SDSKT01FI25
M17 - SDSKT02FI15T20
M18 - SDSKT02FI25
M19 - SDSK01FI15T20D
M20 - SDSK01FI25D
M21 - SDSK02FI15T20D
M22 - SDSK02FI25D
M23 - SDSRKT01FI15T20
M24 - SDSRKT01FI25
M25 - SDSRKT02FI15T20
M26 - SDSRKT02FI25
M27 - SDSRK01FI15T20D
M28 - SDSRK01FI25D
M29 - SDSRK02FI15T20D
M30 - SDSRK02FI25D